This CD provides a suite of tools and documentation to the United States Environmental Protection Agency (EPA) and New York State Department of Environmental Conservation (DEC) for estimating the critical loads[1] of acid-forming atmospheric deposition on waters within the Adirondacks. All of the primary deliverables of the project including schematic conceptual models, bibliographies of literature reviewed, tables describing models and data, and texts describing review results are included in the copy of our current project website (http://acidraintmdl.pnl.gov/) and navigable by browser. Two folders contain relevant data sets, models, and accompanying documentation, in some cases accessible via hyperlink to the world wide web. The assessment tool compiled by Battelle from existing models for application in the Adirondacks is located in the folder containing models and manuals.

Assessing the impact of acid-forming emissions on surface water chemistry involves a variety of models from very disparate disciplines including atmospheric sciences, hydrology, plant physiology and geochemistry. A suite of models is provided in the assessment tool, to span assessment needs from screening to detailed process modeling. Only non-proprietary models were included in the suite. The PROFILE, SAFE and MAGIC models do not provide source code but can be operated without fee on any PC running Microsoft® Windows™ or, in the case of SAFE, Microsoft® DOS. The source codes are provided for PHREEQC2, BiomeBGC, and DHSVM. The Microsoft® Windows™ executable versions for each code, as compiled for this work assignment, are also provided. As an interface platform, a Microsoft® Excel™ spreadsheet that links the PHREEQC2, BiomeBGC, and DHSVM models as Dynamically Linked Libraries (DLLs) was created (Figure 1).

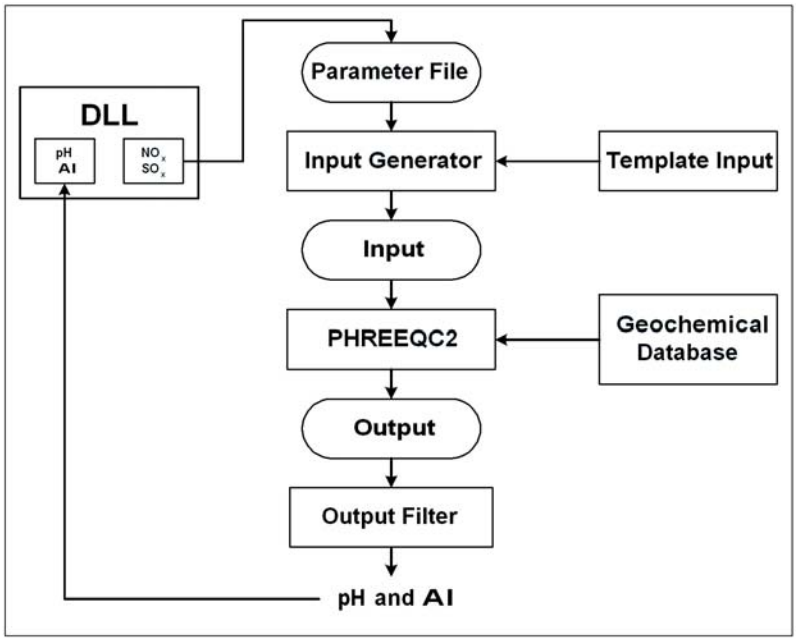

Figure 1. Dynamically Linked Libraries (DLL) Process.

[1] Critical load is the minimum level of deposition that will result in a violation of the regulatory water quality criteria.

The Microsoft® Excel™ spreadsheet links the PHREEQC2, BiomeBGC, and DHSVM models for more detailed dynamic analyses, such as are likely required to provide an open and defensible scientific basis for the implementation of TMDLs. This spreadsheet provides default values and references, where available, for model parameters and allows the user to alter one or more parameters via the EXCEL™ interface (Figure 2). Users may alter the classification rules applied to Adirondack Lakes to map critical loads for lakes by category. Unfortunately, even in the relatively data rich region of the Adirondacks, the data required to parameterize, calibrate, and validate such models is generally unavailable. The CD provides datasets with information specific to the Adirondacks; however, further data collection is suggested.

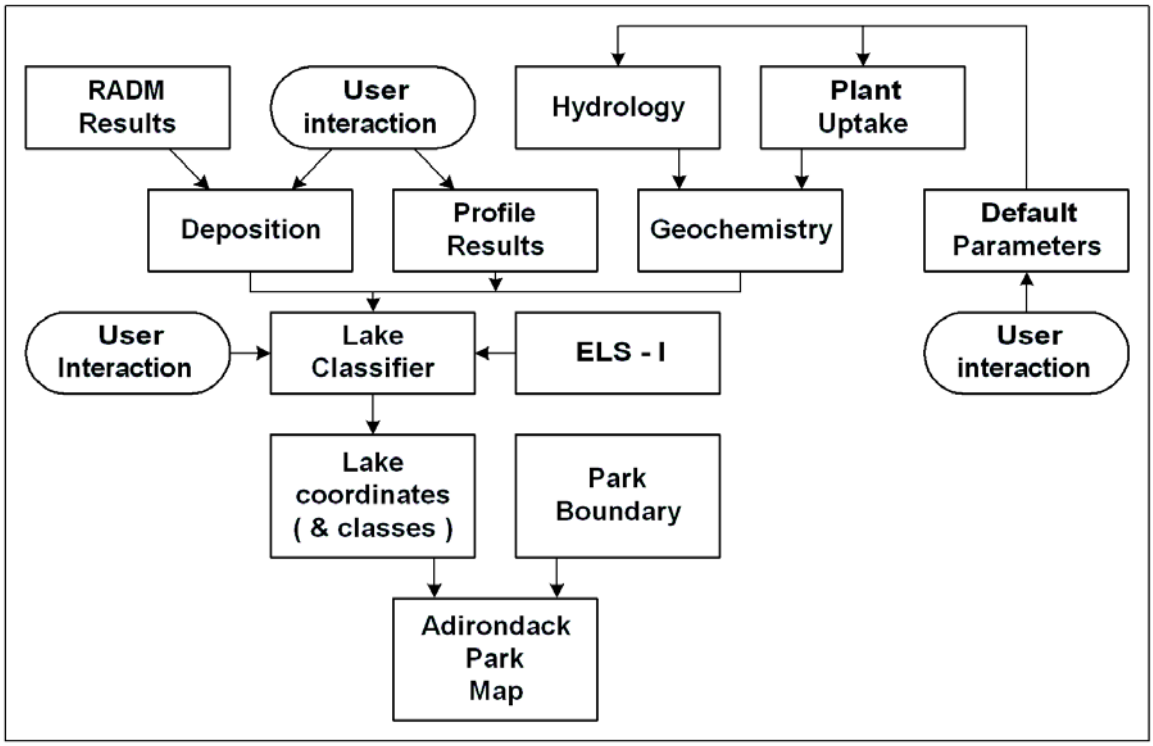

Figure 2. Sheet interaction and user input in DLL.

Critical loads represent the interface between the biogeochemical process models and the atmospheric models (Figure 3). The biogeochemical process models are used at the watershed scale to estimate the critical load (Figure 4). The atmospheric models can be used to reflect various emission scenarios to estimate deposition levels. If atmospheric models predict deposition levels in excess of critical loads this emission scenario is presumed to violate the water quality standard. Critical loads can be mapped for the entire domain, if adequate data to parameterize the models are available. Specific emissions scenarios can be input into the Regional Acid Deposition Model (RADM), and the resulting deposition simulated in the biogeochemical model; however, the output data would be qualified by presumed climate conditions. This approach makes it possible to run atmospheric models and watershed biogeochemistry models independently, and thereby accelerate the overall assessment process.

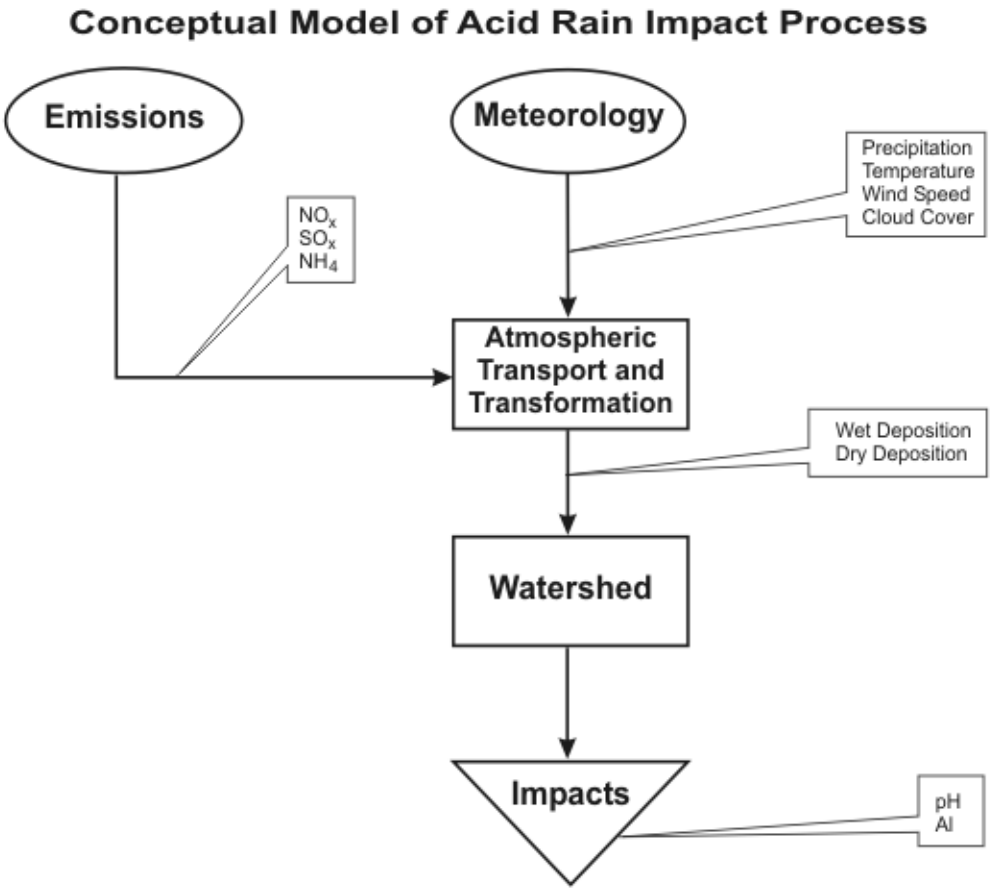

Figure 3. Conceptual model of acid rain impact process.

"Critical load" is a powerful concept, but not without some complications.

- Deposition is typically expressed in terms of NO_3, SO_4, and NH_4 fluxes to the watershed per unit area. (NH_4 tends to increase pH). "Critical loads" must be expressed for various ratios of NO_3/SO_4.
- "Critical load" is fundamentally a steady-state concept; when applied to a real dynamic environment, it becomes more difficult to estimate. Assuming worst-case conditions (i.e. no exchange capacity and spring freshet flow conditions) in a steady-state model would result in particularly onerous emission restrictions. Critical loads based on steady-state models will not reflect any dynamic aspects.
- The choice of assessment endpoints for TMDL development in the Adirondacks region is discussed in a separate document on the project website (http://acidraintmdl.pnl.gov/notes.htm).

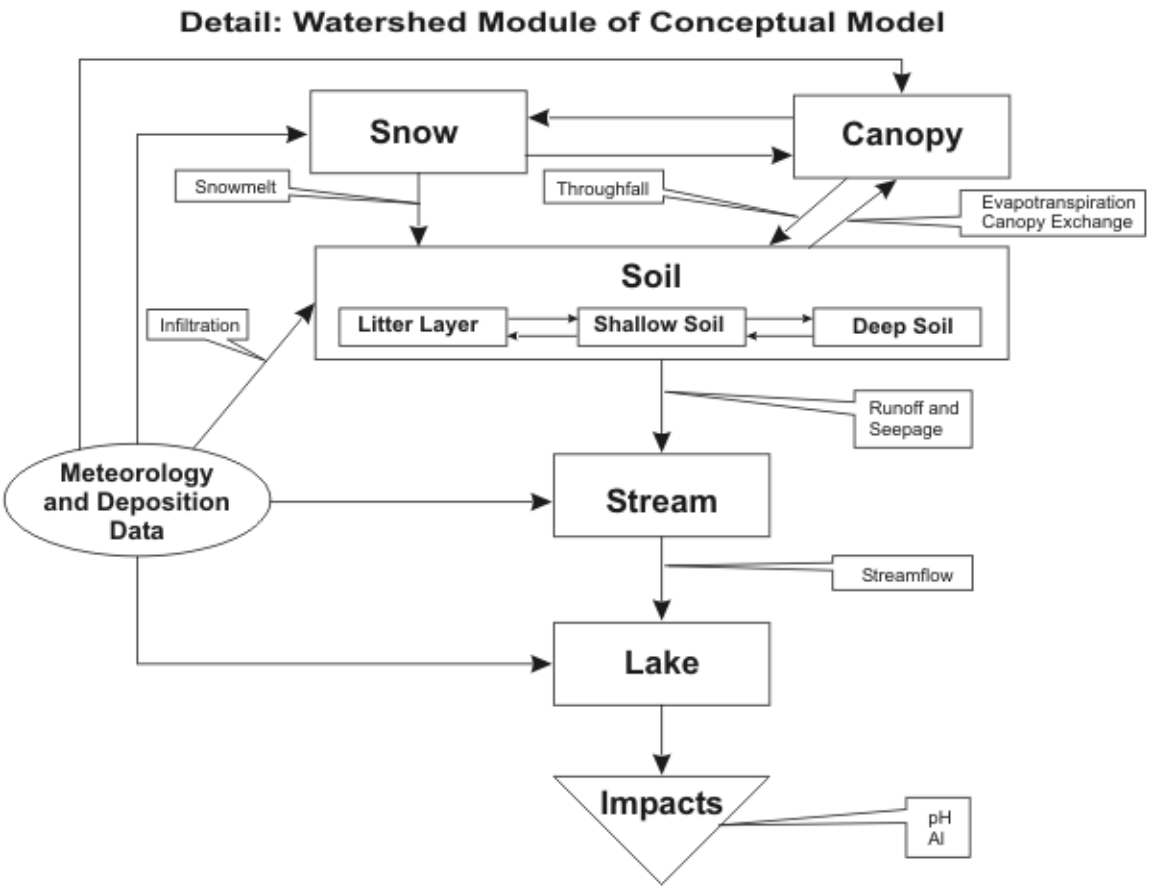

Figure 4. Detail: Watershed module of conceptual model.

PROFILE is provided as a screening tool. While PROFILE has many significant limitations, in most cases its degree of complexity is consistent with the limitations imposed by the available data. The parameter set for PROFILE provided is based on published reports of a field experiment conducted at the Bear Brook site. PROFILE explicitly estimates the critical load based on user specified criteria for pH, ANC, or Al for each soil layer. Unfortunately, lack of access to the source code, does not allow this to be altered to reflect only the surface water chemistry as is most appropriate for TMDLs. PROFILE includes components for uncertainty and sensitivity analysis of key parameters.

The RADM model is consistent with the state-of-the-science in atmospheric modeling. Our review of available models found that the most applicable models for simulating acid deposition over the eastern U.S.A. are based on the RADM2.6 model and its various supporting models for meteorology and emissions. We have no basis to suggest that a different modeling approach be utilized for the atmospheric component.

RADM is used to simulate an ensemble of 5-day scenarios. Each scenario represents a unique climatic state. Aggregating the deposition estimates (only the final 3 days are used to allow the model 2 days to 'set up') can be done to provide seasonal or annual

estimates of deposition of NO_3, SO_4, and NH_4. Algorithms for aggregating the RADM results for NO_3, SO_4, NH_4 and H are provided in the data folder; these convert units of deposition (kg/ha) to kEq/m^2. We aggregated outputs provided by DEC for four cells of the RADM grid, which cover 160 km^2 of the Adirondack region.

Suppression of natural fire activity in the region has altered the canopy structure and nutrient cycling properties. Part of the reason for lower pHs in the Adirondacks may be attributable to the overall maturity of the forest canopy. A developing canopy may consume all of the available NO_3, whereas, once a forest reaches equilibrium, mass balance considerations suggest NO_3 will be released to the water draining from the canopy. BiomeBGC is provided as an analytical tool for bounding this impact.

<u>References Used in Preparing Calibration Data Set: Bear Brook Watershed, Maine</u>

Cosby BJ, SA Norton, and JS Kahl. 1996. "Using a paired-catchment manipulation experiment to evaluate a catchment-scale biogeochemical model." *Science of the Total Environment* 183:49-66.

David M, G Vance, and JS Kahl. 1999. "Chemistry of dissolved organic carbon at Bear Brook Watershed, Maine: Stream water response to $(NH_4)2SO_4$ Additions." *Environmental Monitoring and Assessment* 55:149-163.

Kahl JS, SA Norton, IJ Fernandez, L Rustad, and M Handley. 1999. "Nitrogen and sulfur input-output budgets in the experimental and reference watersheds, Bear Brook Watershed in Maine (BBWM)." *Environmental Monitoring and Assessment* 55:113-131.

Norton SA, JS Kahl, IJ Fernandez, LE Rustad, TA Haines, SC Nodvin, JP Scofield, TC Strickland, PJ Wigington, and J Lee. 1999. "The Bear Brook Watershed in Maine (BBWM)." *Environmental Monitoring and Assessment* 55:7-51.

Norton SA, RF Wright, JS Kahl, JP Scofield. 1992. "The MAGIC simulation of surface water acidification at, and first year results from, the Bear Brook Watershed Manipulation Project, Maine, USA." *Environmental Pollution* 77:279-286.

Nadelhoffer K, M Downs, B Fry, A Magill, J Aber. 1999. "Controls on N retention and exports in a fertilized forested watershed." *Environmental Monitoring and Assessment* 55:187-210.

Rustad LE, JS Kahl, SA Norton, and IJ Fernandez. 1994. "Underestimation of dry deposition by throughfall in mixed northern hardwood forests." *Journal of Hydrology* 162:319-336.

Schnoor JL. 1990. "Kinetics of chemical weathering: a comparison of laboratory and field weathering rates." In: *Aquatic Chemical Kinetics,* W. Stumm, Ed., Wiley Interscience, New York, pp. 475-504.